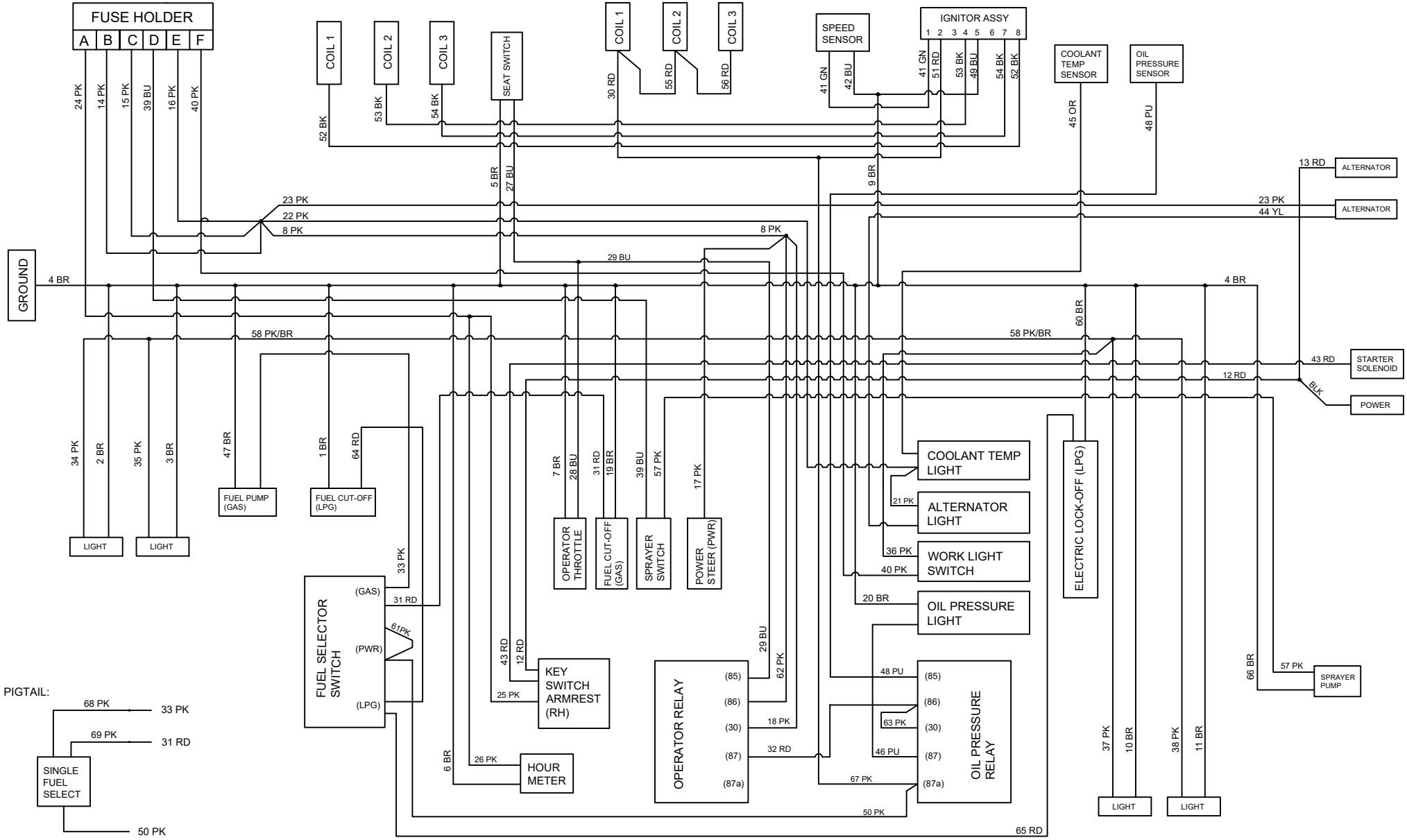

NOTES:

1. CHANGES DONE TO THIS HARNESS MUST ALSO BE DONE TO THE SCHEMATIC 599 10 45-01
2. FOR USE ON GAS MACHINES: SUPPLIER TO ATTACH PIGTAIL TO FUEL SELECTOR SWITCH: TERMINAL AV TO 50 PK (PWR), 68 PK TO 33 PK, 69 PK TO 31 RD

Rev.	Description	Design	Check	Date
A	Drawing created	JMF	WN	2012-01-06
B	Redrawn to current format	MB	TE	2021-05-14

Husqvarna

This drawing is our exclusive property and is to be returned on request. It must not in any form be used to the prejudice of our interests. ©

Design By: MB
Checked By: TE
Approved By: TG
Date: 2021-04-15

Title
Wiring Schematics
Main circuit
CRT48-33K

schem33K.dwg
Printed 14 July 2021 at 09:28

Items shown in this drawing must not contain substances classified as "banned" or "restricted" according to the Husqvarna Group Restricted Materials List (see www.purchase.husqvarna.com)

Sheet No 1 Of 1

Function
Location
Article No. 599 10 45-01
Rev. B